9510 Remote Airborne Particle Counter

1.0 CFM (28.3 LPM)

Particles Plus® 9510 Remote Airborne Particle Counters monitor particle sizes ranging from 0.5 to 25 µm across six user-selectable channels at a flow rate of 1.0 CFM (28.3 LPM). These instruments are designed for collecting particle data in cleanrooms or other controlled environments, and seamlessly integrate with Particles Plus® Software, facility monitoring systems, or local data collection platforms.

The 9510 supports data reporting in standard cleanroom formats or as mass concentration in µg/m³, with density and refractive index corrections. Optional temperature and relative humidity probes allow integration of three key data points into a single monitoring location.

Standardized hardware and firmware across the Particles Plus® product line streamline maintenance and lower the total cost of ownership. With extensive remote diagnostics and a lifetime warranty, the 9510 delivers reliable performance and long-term value.

Features and Benefits

- 1.0 CFM (28.3 LPM) flow rate
- Long-life laser diode technology for reliable performance
- Measures up to 30 user-selectable particle size channels
- Internal critical orifice provides precise airflow control for consistent measurements
- Accurate in high concentration environments with minimal time to zero-count
- Troubleshoot issues remotely from anywhere with an internet connection
- Stores up to 65,000 sample records, 1,000 locations, and 50 sampling recipes
- Optional temperature and relative humidity probe available
- Connect via Modbus RTU/ASCII over isolated RS-485, TCP/IP, PoE, or WiFi
- Complies with ISO 21501-4 and JIS B9921 standards
- Easy to clean, lightweight stainless steel enclosure with minimal particle traps
- Included mounting bracket
- User configurable alarm light and LED indicators for real-time alerts
- Seamless integration into a facility monitoring system
- 2 Year Limited Warranty (Extended and Lifetime Warranties available)

Specifications

Model	**9510**
Size Range	0.5 µm to 25 µm
Size Channels	Factory calibrated at 0.5, 1.0, 2.5, 5.0, 10.0 µm
Counting Efficiency	50% @ 0.5µm; 100% for particles > 0.75 µm per JIS
Flow Rate	1.0 CFM (28.3 LPM)
Concentration Limits	1,500,000 particles/ft^3 @ 10% coincidence (per ISO 21501-4), 3,000,000 particles/ft^3 @ 10% coincidence (as tested and validated[1])
Light Source	Long life laser diode
Zero Count	<1 count / 5 minutes (< 1 particles / 15ft^3). No fault count subtraction. No appreciable drift.
Alarms	Channel alarms on Raw counts, concentrations or mass (alarms on environmental sensors optional)
Calibration	NIST traceable
Vacuum Requirements	External vacuum > 15” (38.1cm) of Hg
Airflow	Internally monitored
Number of Channels	6 channels (up to 30 channels of simultaneous data)
Configuration/Download	USB mini-B
Alarm	Alarm LED ring
Communication Modes	MODBUS™ RTU or ASCII outputs (over isolated RS-485)
Standards	ISO 21501-4 and JIS B9921
Instrument Calibration	Recommended minimum once per year
External Surface	Stainless steel
Dimensions (L x W x H)	3.59 x 1.83 x 5.01 in (9.1 cm x 4.6 cm x 12.7 cm) including probes and connectors
Weight	1.08 lb. (494 grams)
Accessories	Terminal block plug, User Manual, and Instrument Management Software (USB Key)
Optional Accessories	Power Supply, Remote Mounting Bracket, Stainless Steel Barbed Isoprobe (1.0 CFM/28.3 LPM), Purge Filter Assembly, USB-A to USB-Mini cable and Sample & Vacuum Tubing
Buffer Memory	65,000 sample records (rotating buffer) including particle count data and environmental data
Sample Time	1 second to 99 hours
Power	7-15 VDC (< 2 watts)
Operating Conditions	41-104ºF (5-40ºC) / 20% to 95% non-condensing
Storage Conditions	32-122ºF (0-50ºC) / Up to 98% non-condensing
Warranty	2 Year Limited Warranty (Extended and Lifetime Warranties available)

1- Validated by independent analysis see paper available at www.particlesplus.com/aac2022_paper

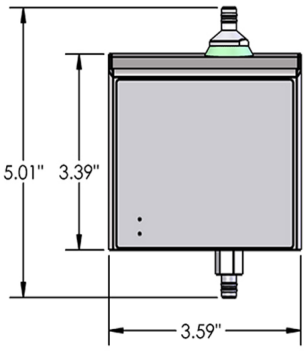

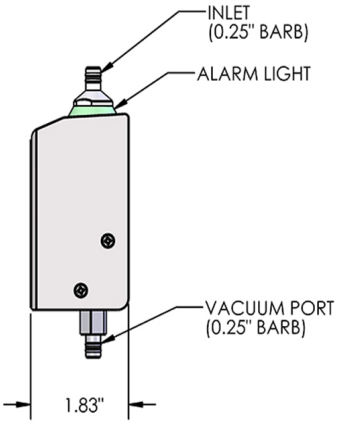

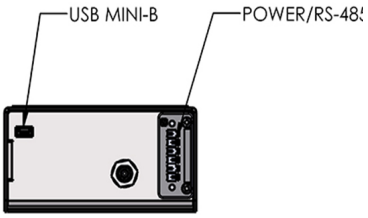

PAT. https://particlepatents.com/ Additional Patents Pending.
Particles Plus, Inc. reserves the right to change specifications without notice.
Contact hello@particlesplus.com or your local distributor for more details.
Particles Plus and the Particles Plus logo are trademarks of Particles Plus, Inc.
©2025 Particles Plus, Inc. All rights reserved.

REV 20260220-9510

Made in USA

PARTICLES PLUS®

1490 Central Street
Stoughton, MA 02072 U.S.A.
+1-781-341-6898
www.particlesplus.com